1 - 5

Holz
Wood
Bois

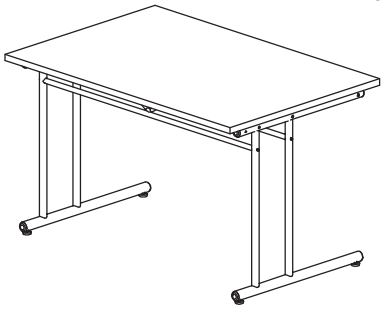

Holz
Wood
Bois

6 - 7

Zubehör
Accessory
Accessoire

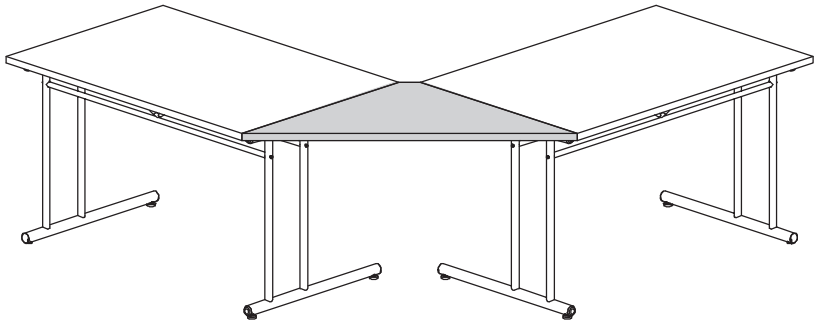

Holz
Wood
Bois

4

Zubehör
Accessory
Accessoire

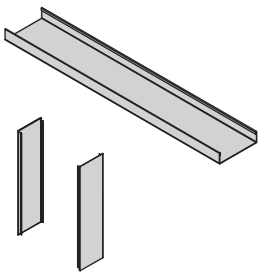

8 - 12

Zubehör
Accessory
Accessoire

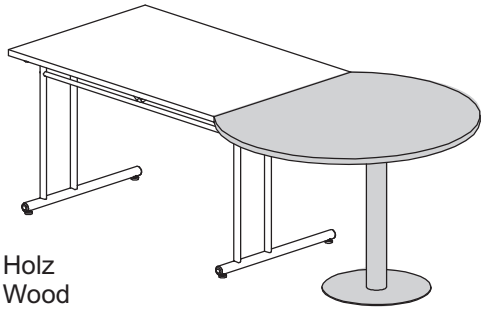

Holz
Wood
Bois

13 - 16

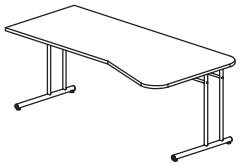

Holz
Wood
Bois

17 - 20

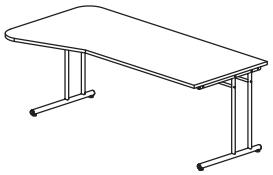

Holz
Wood
Bois

21 - 24

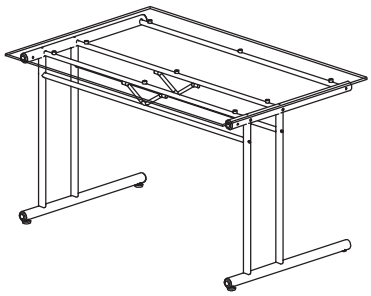

Glas
Glass
Verre

25

Zubehör
Accessory
Accessoire

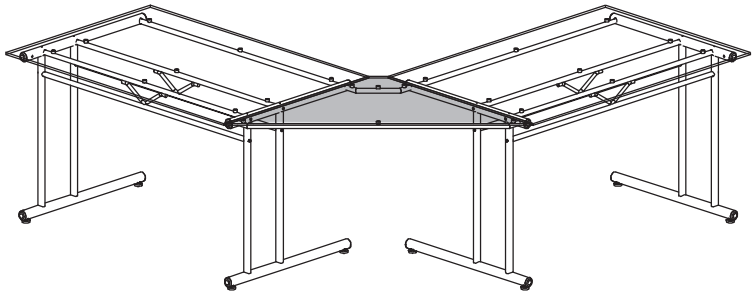

Glas
Glass
Verre

1

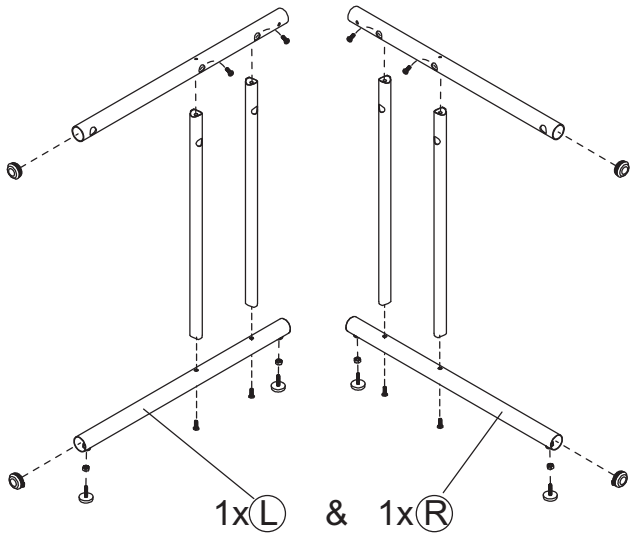

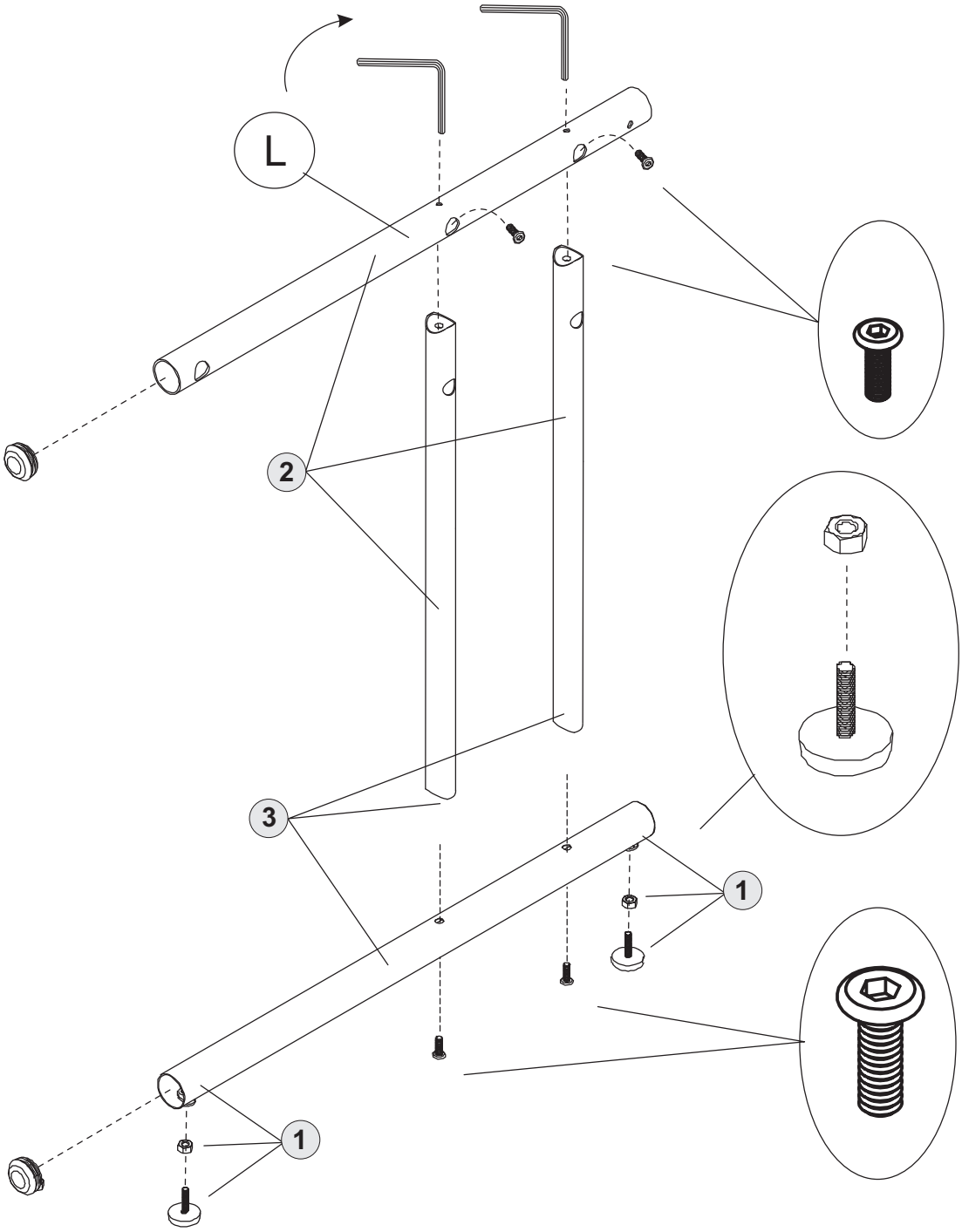

2

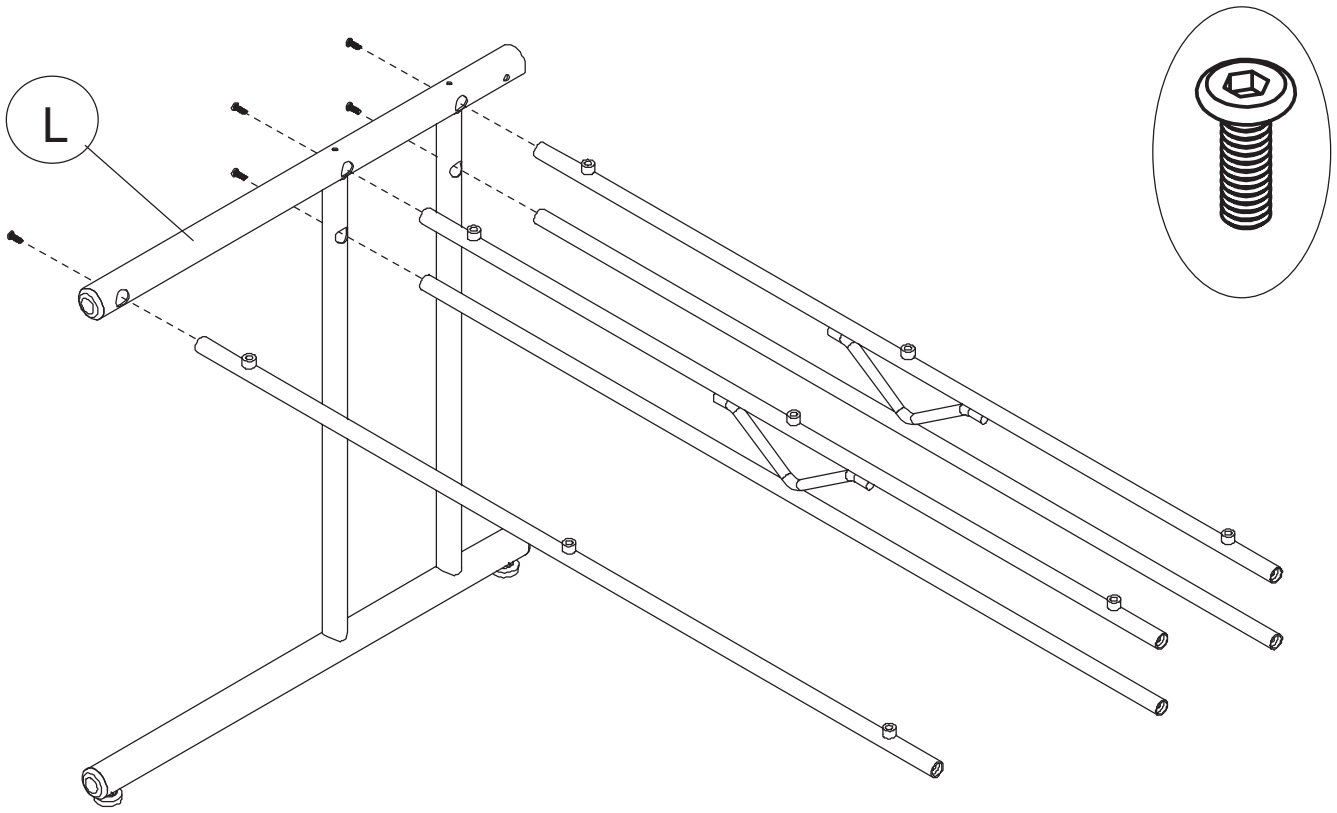

3

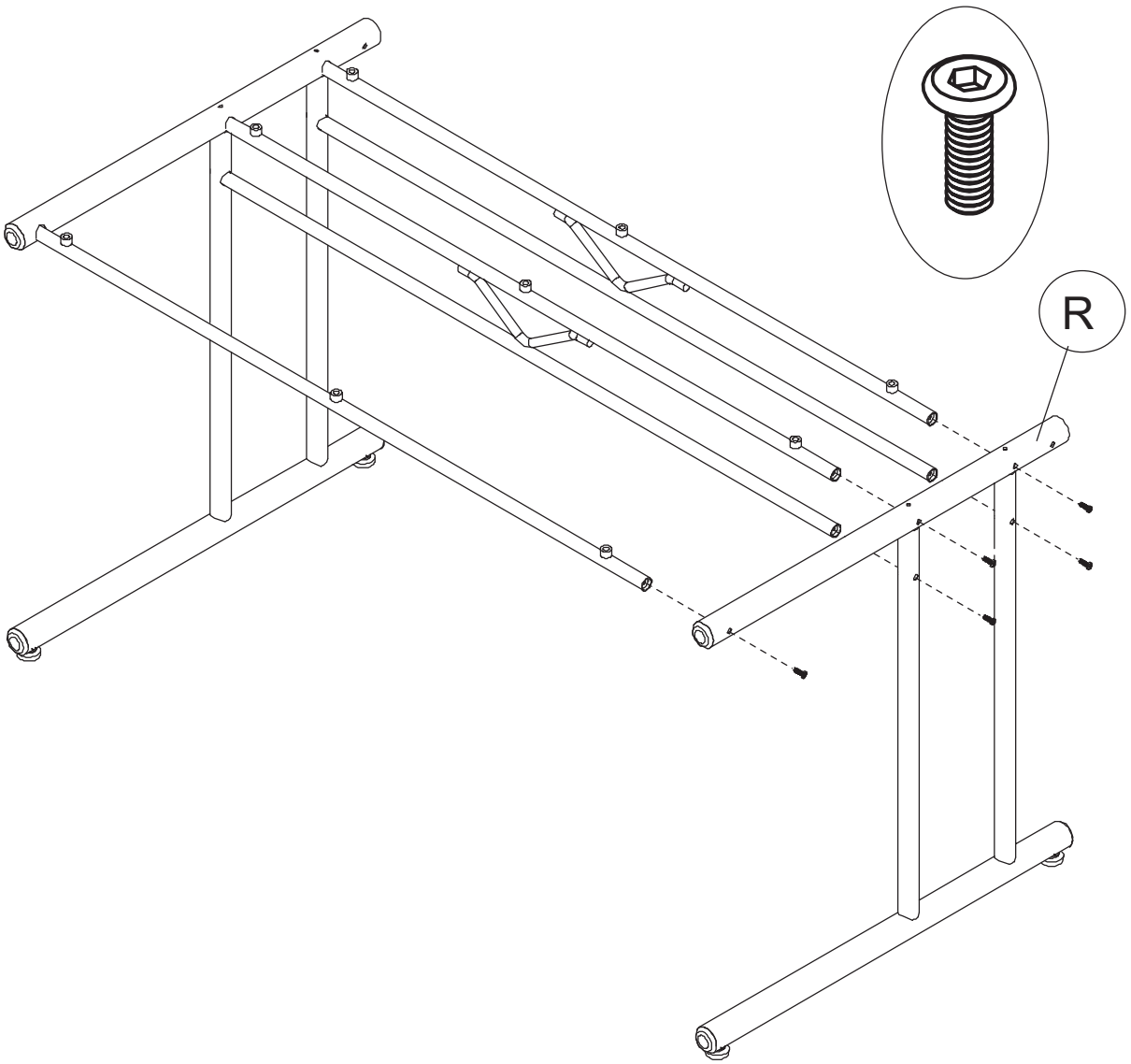

4 Zubehör/accessory/accessoire

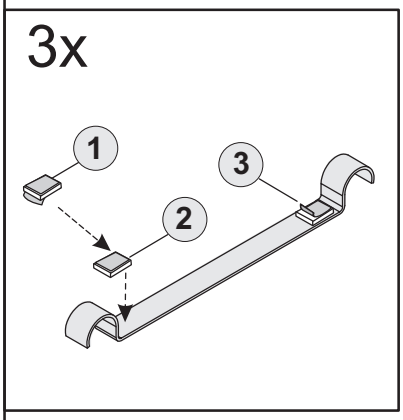

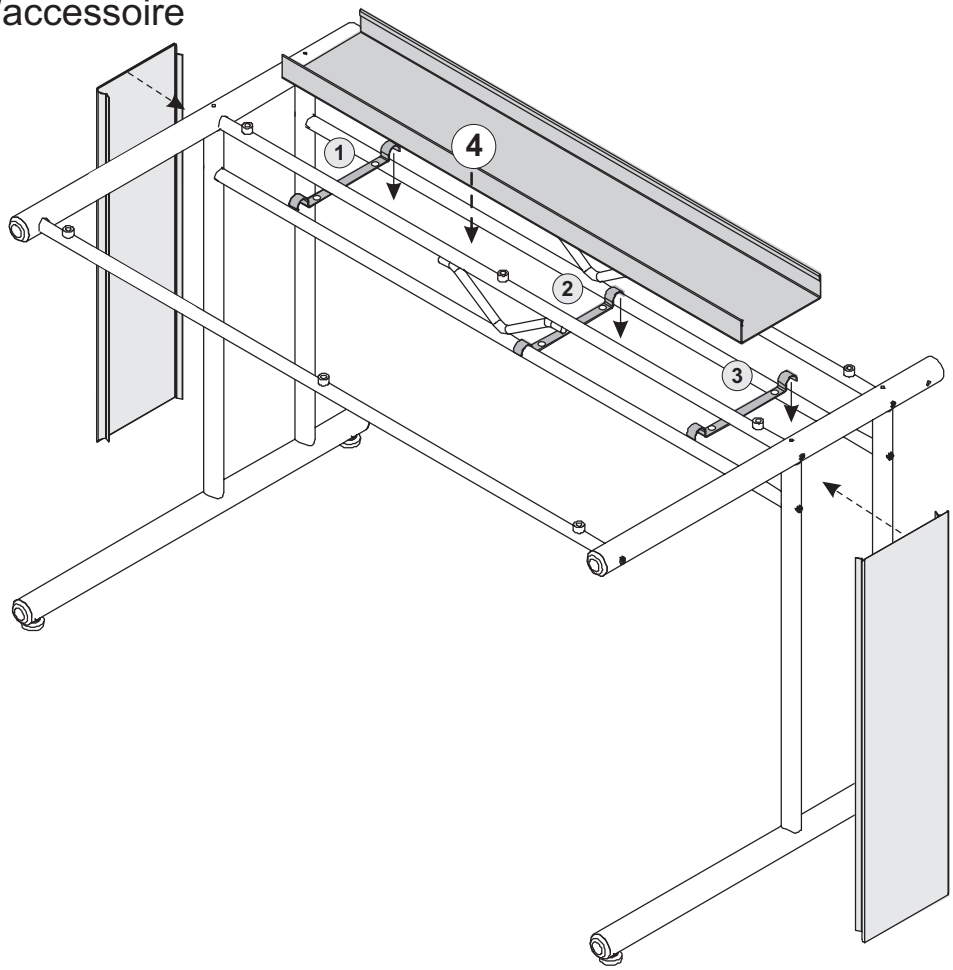

5

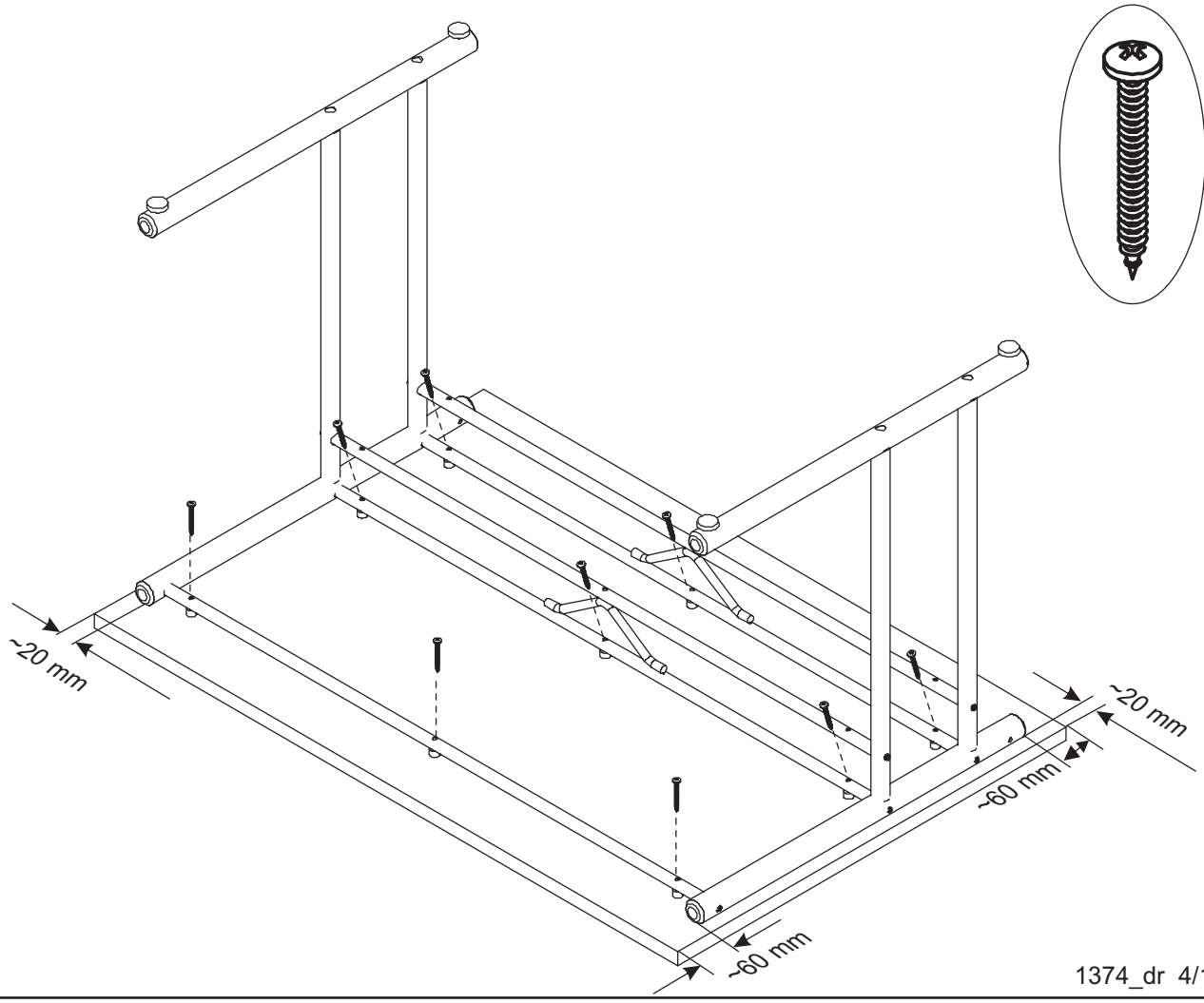

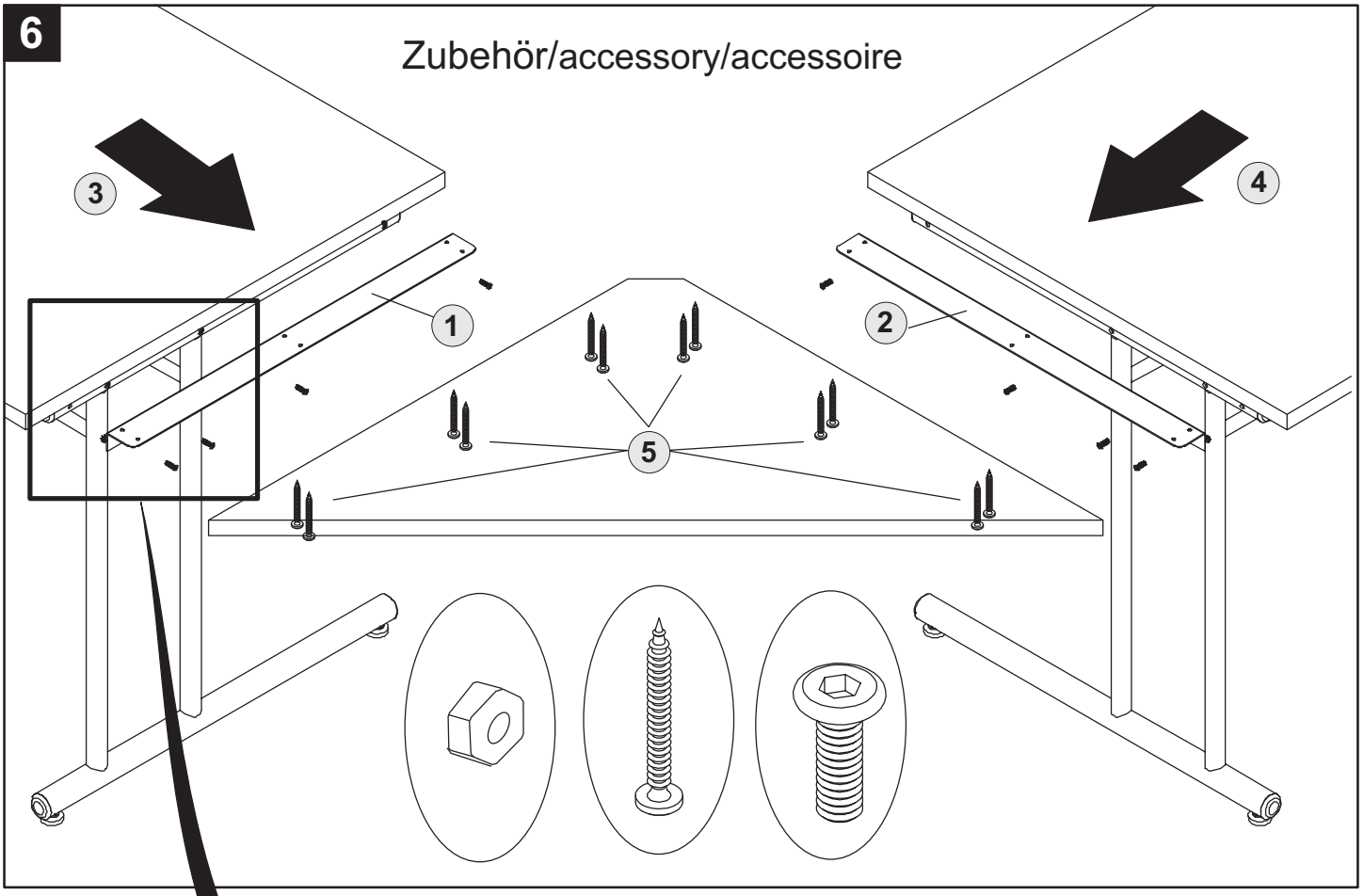
6
Zubehör/accessory/accessoire
3
4
1
2
5

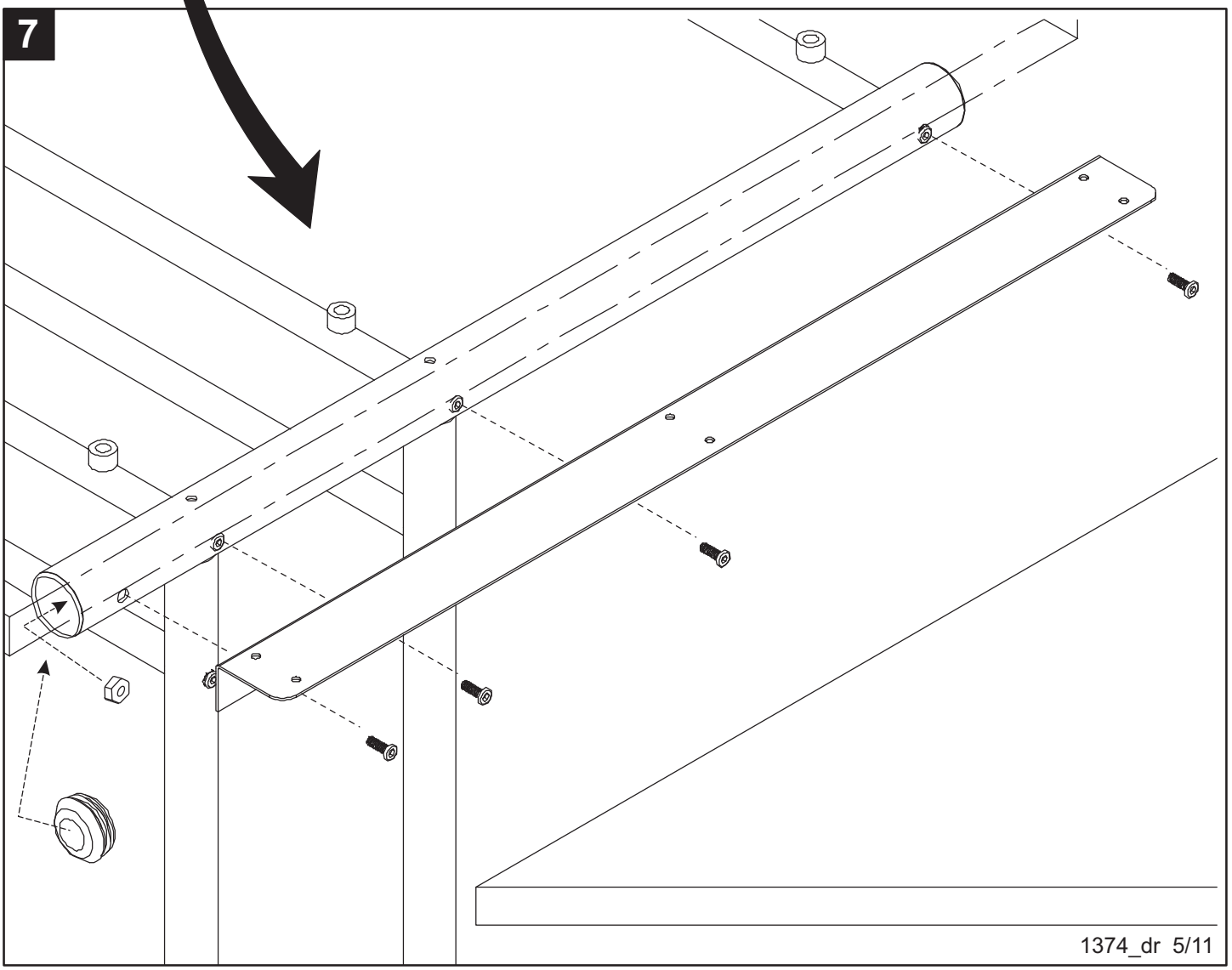
7
1374_dr 5/11

Zubehör/accessory/accessoire

8

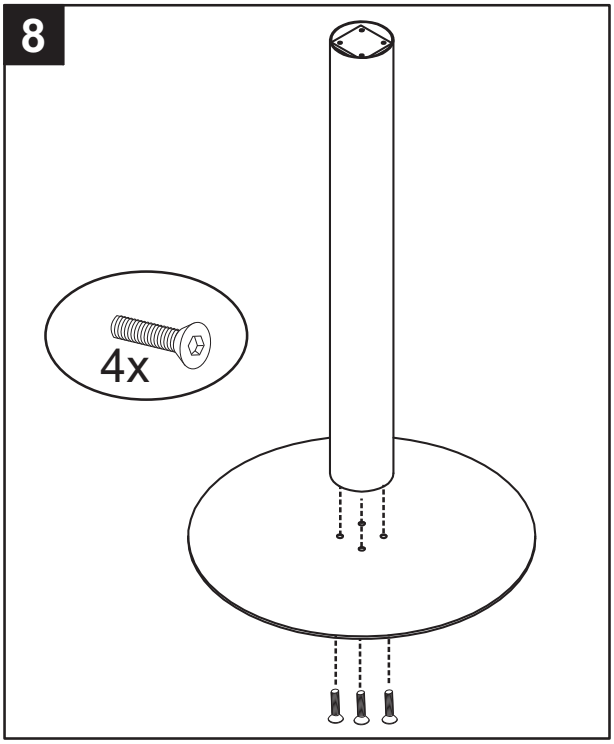

9

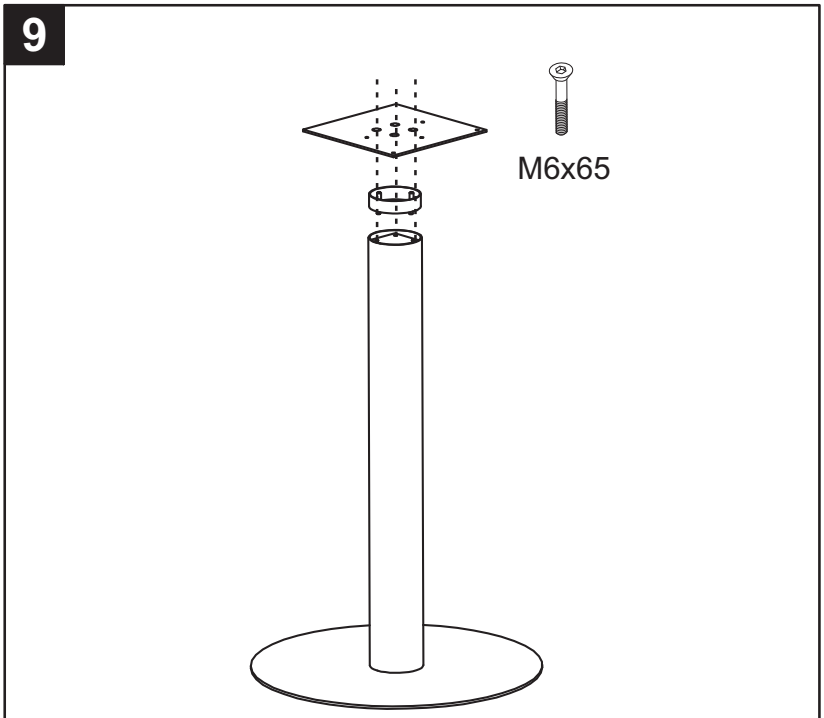

10

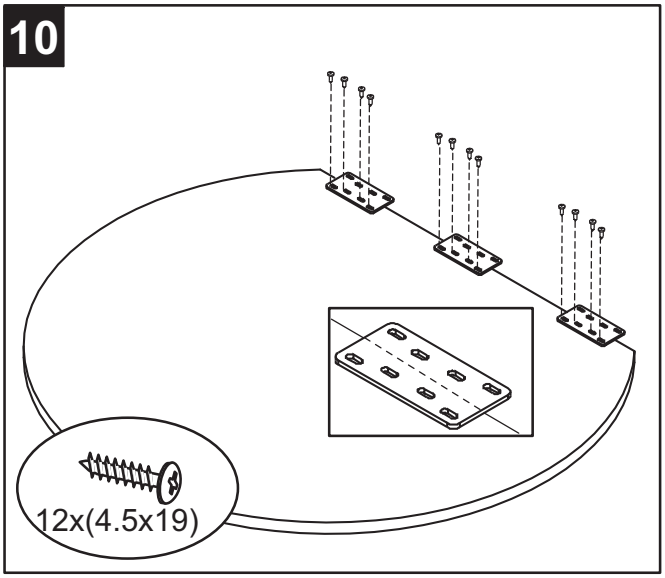

11

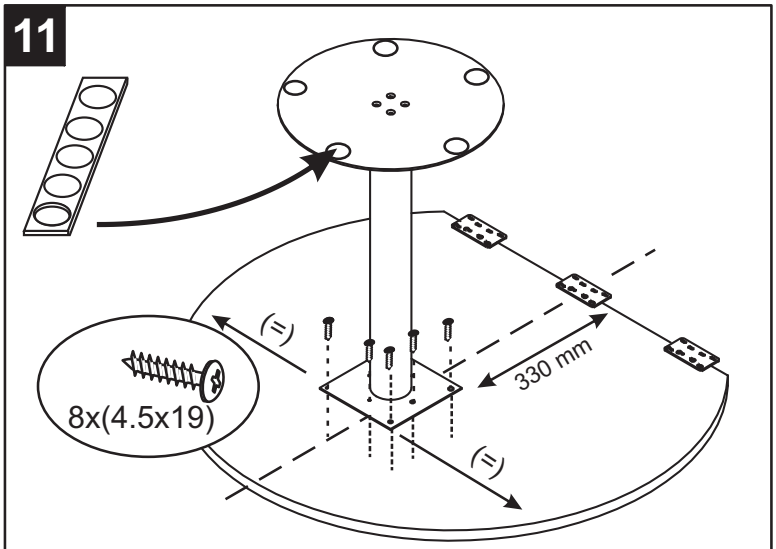

12

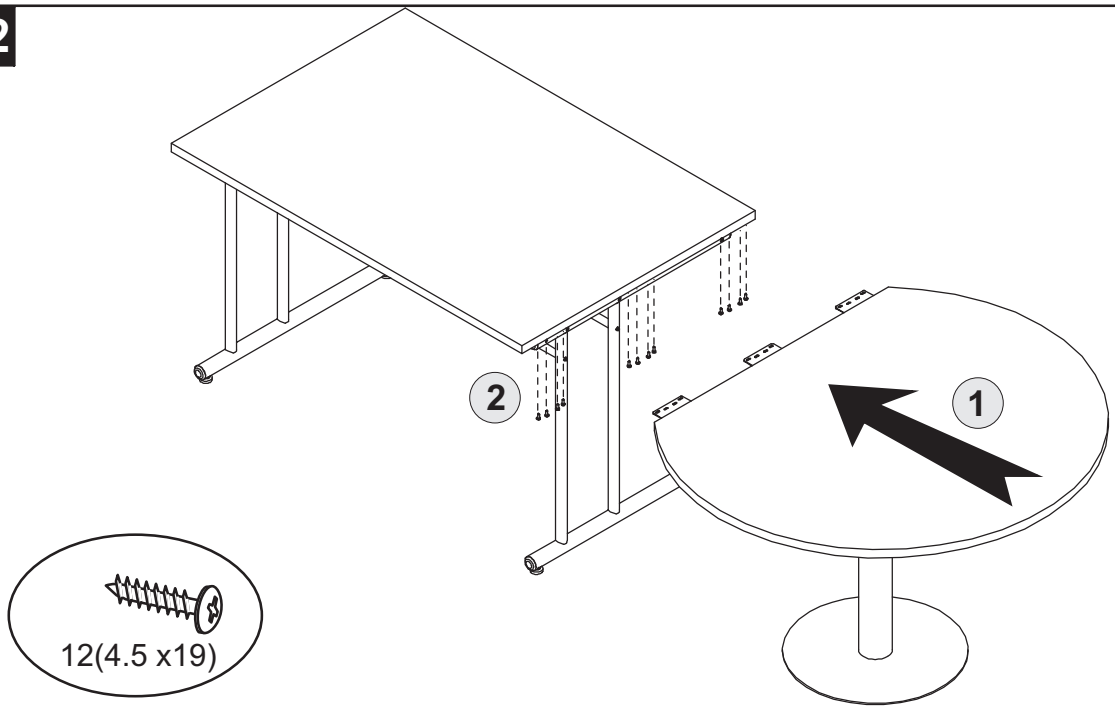

1374_dr 6/11

13

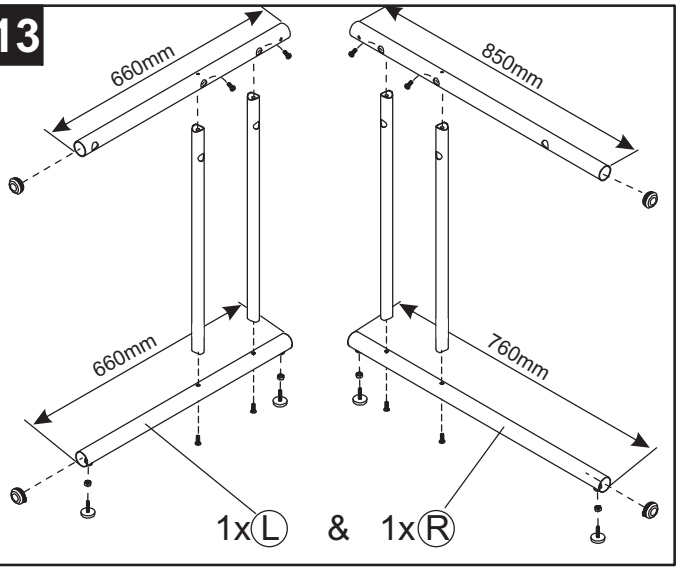

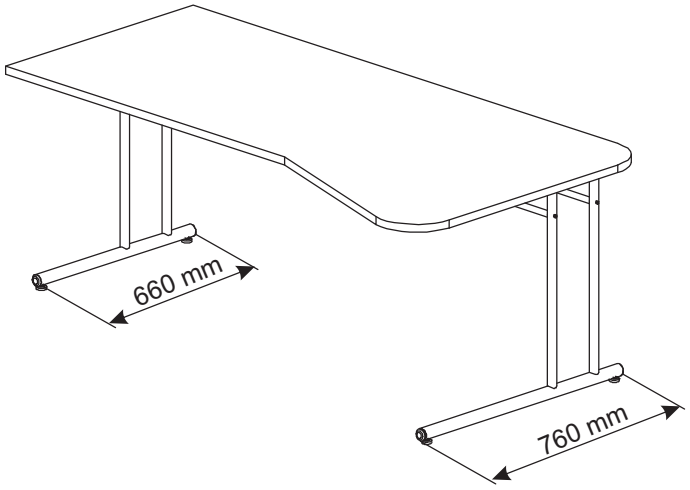

14

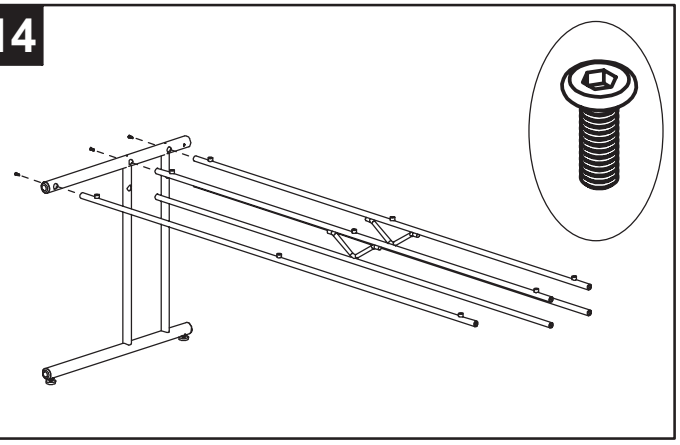

15

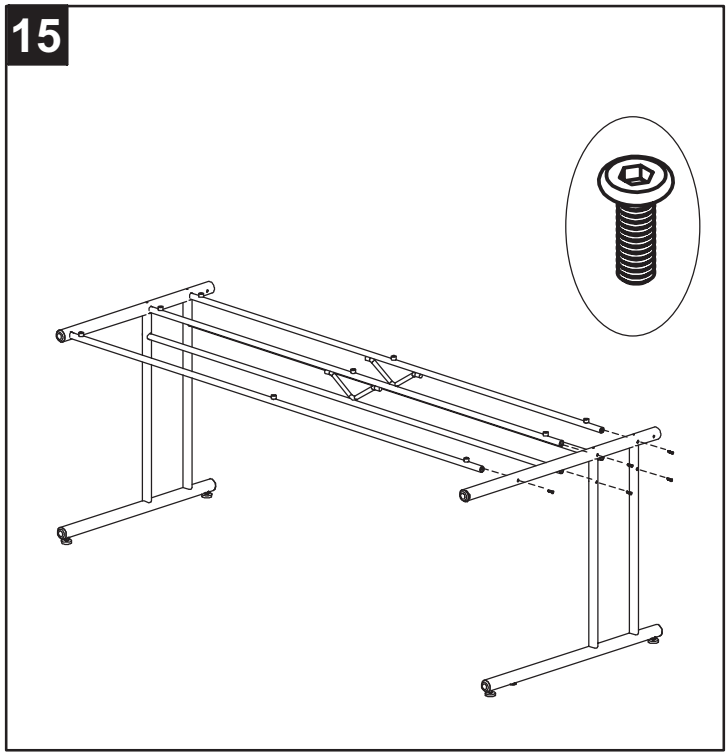

16

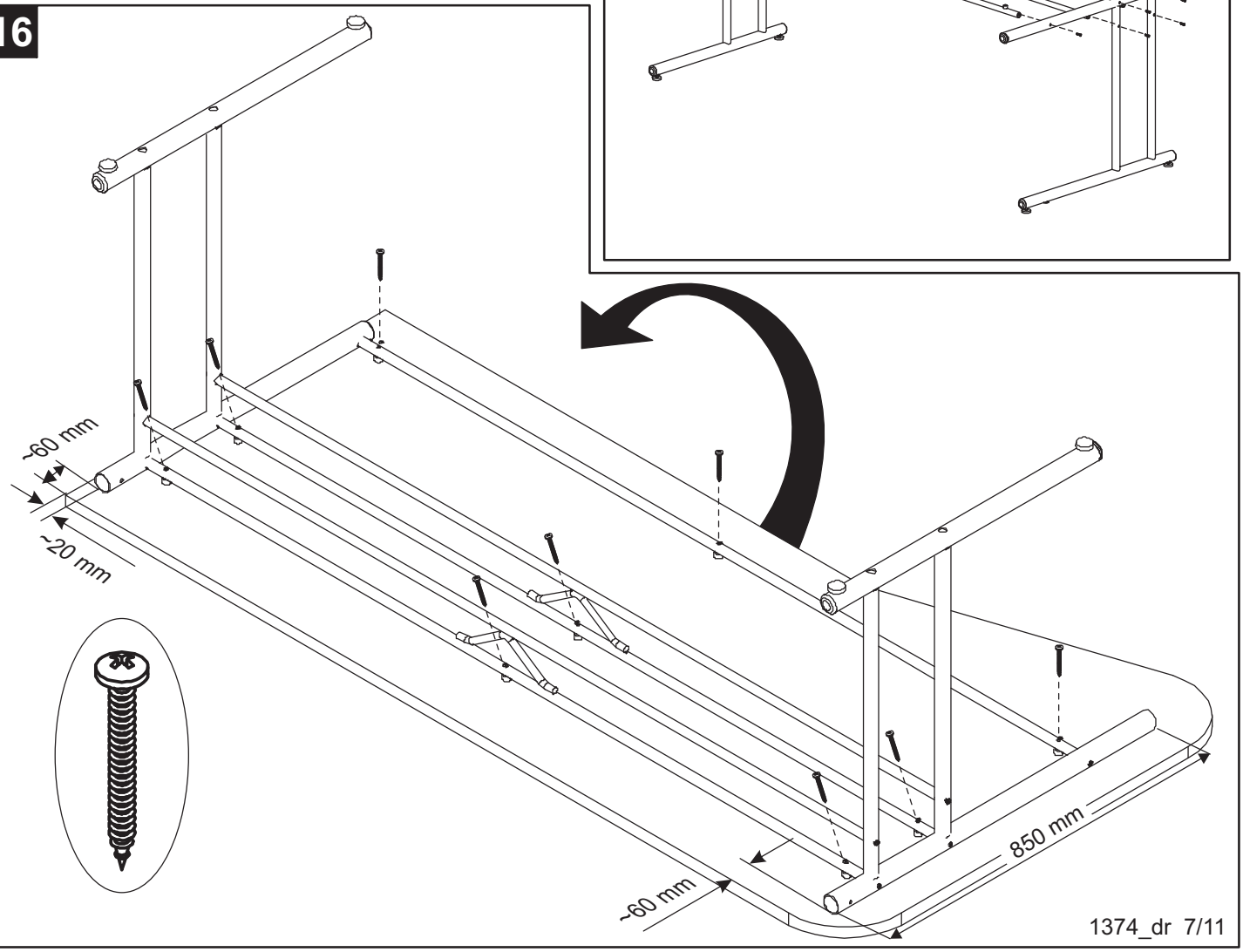

1374_dr 7/11

17

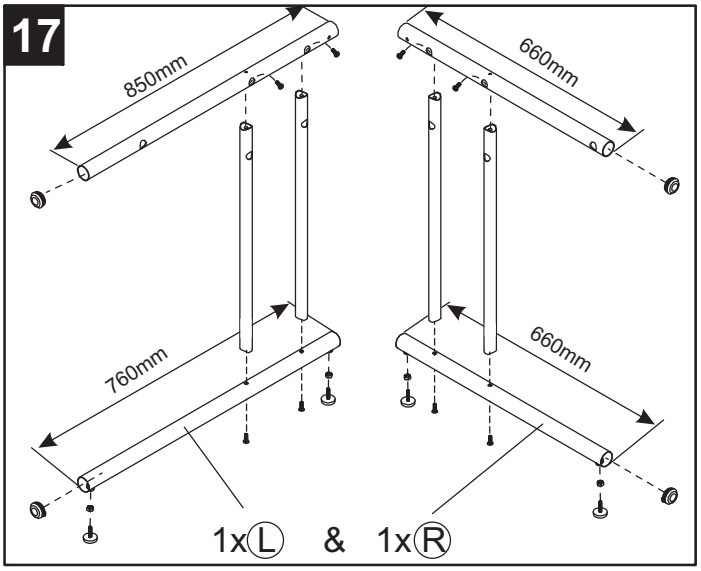

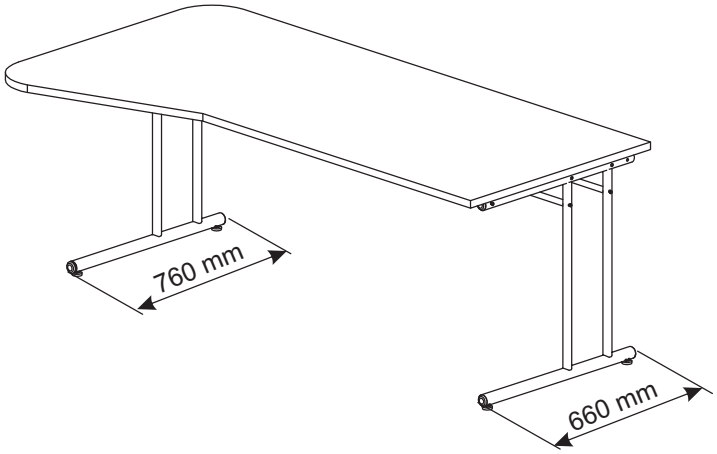

19

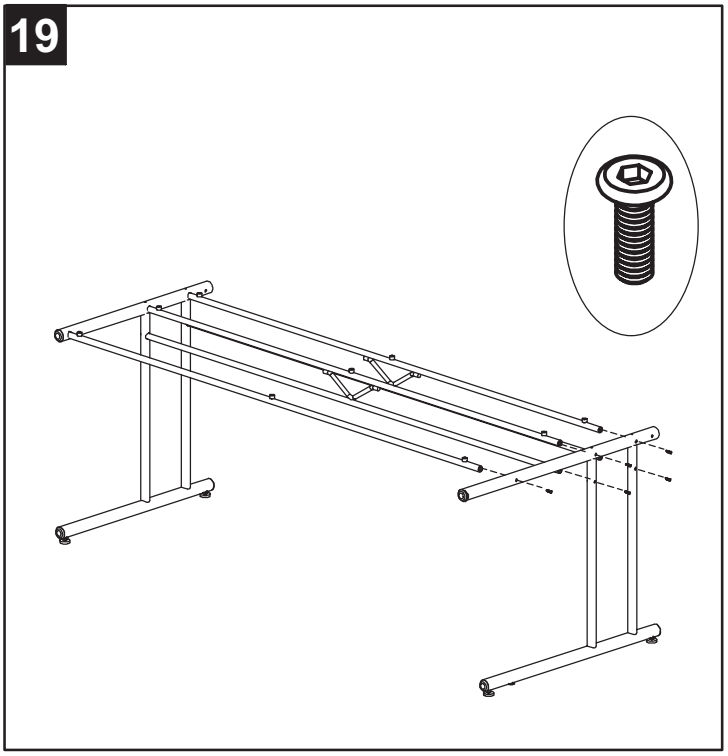

18

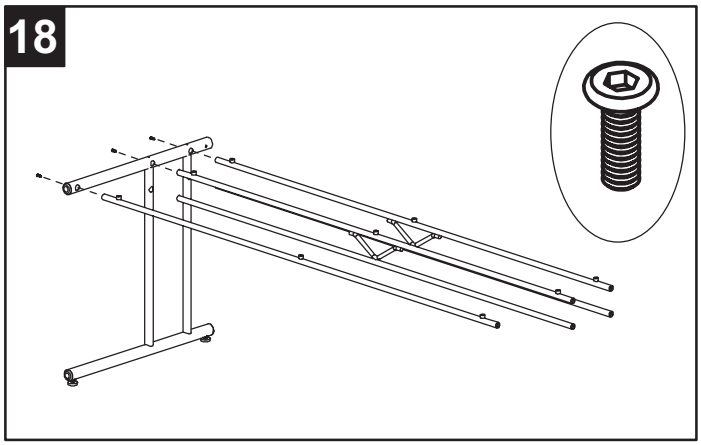

20

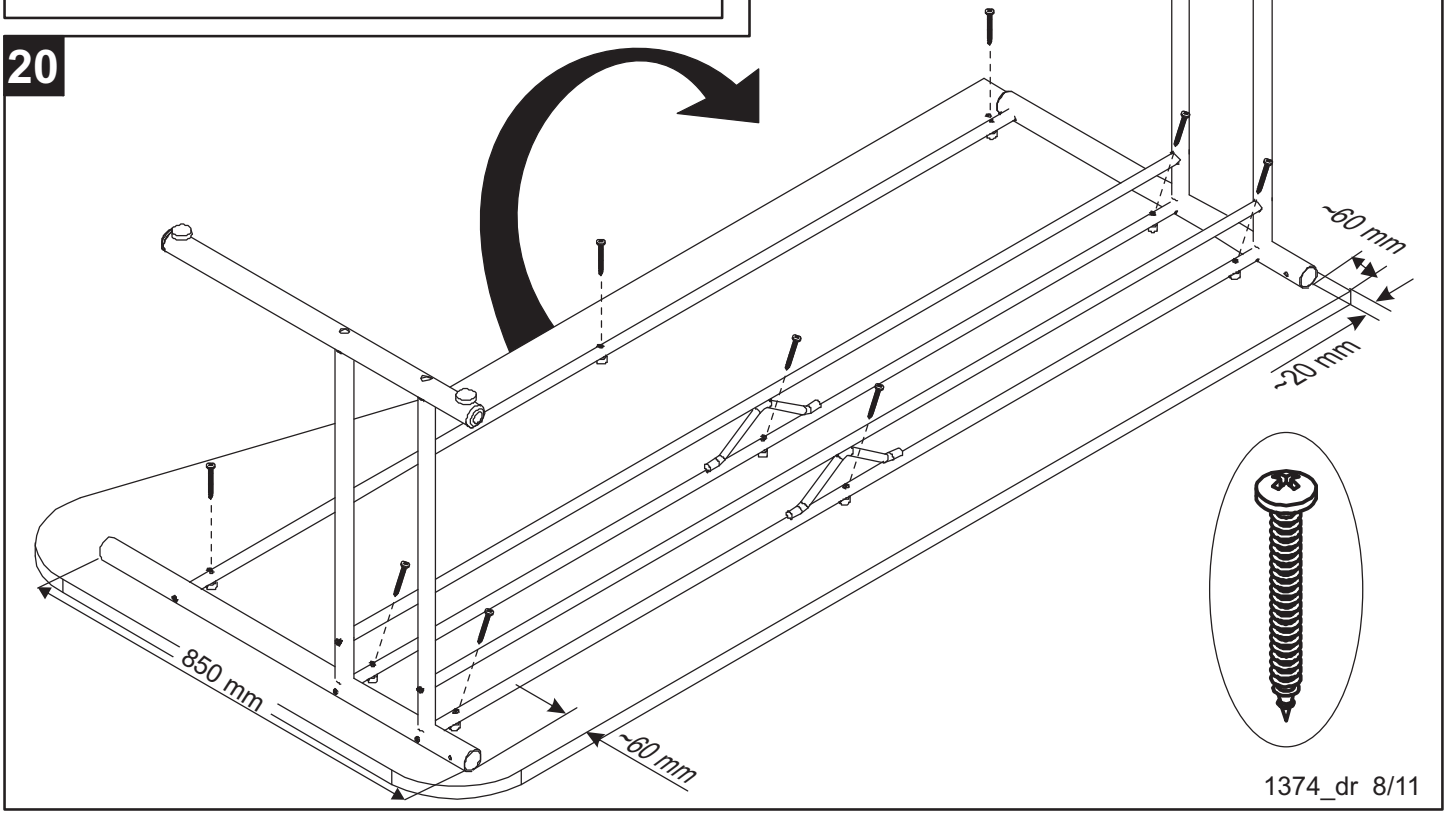

1374_dr 8/11

21

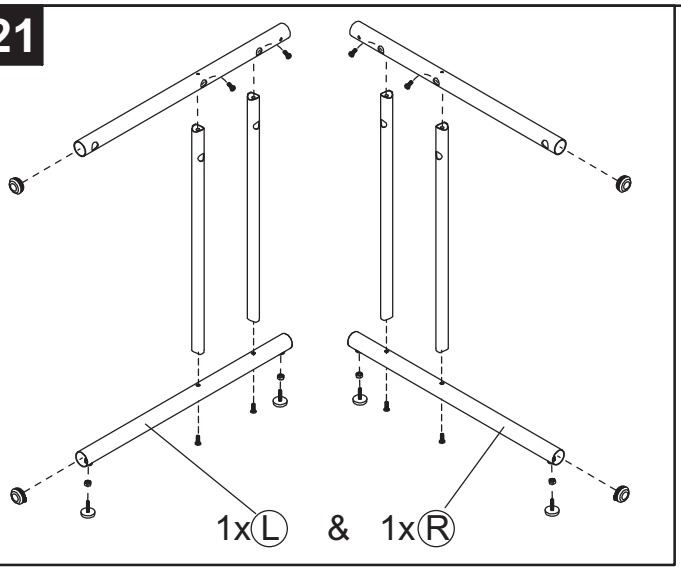

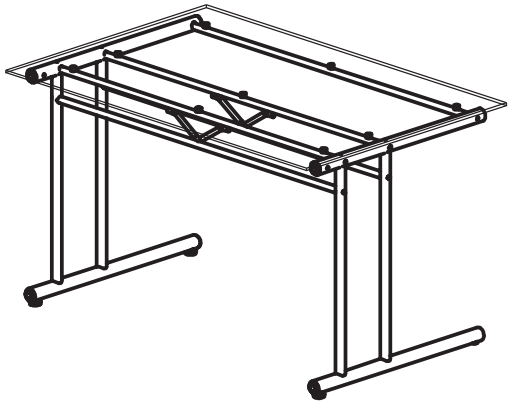

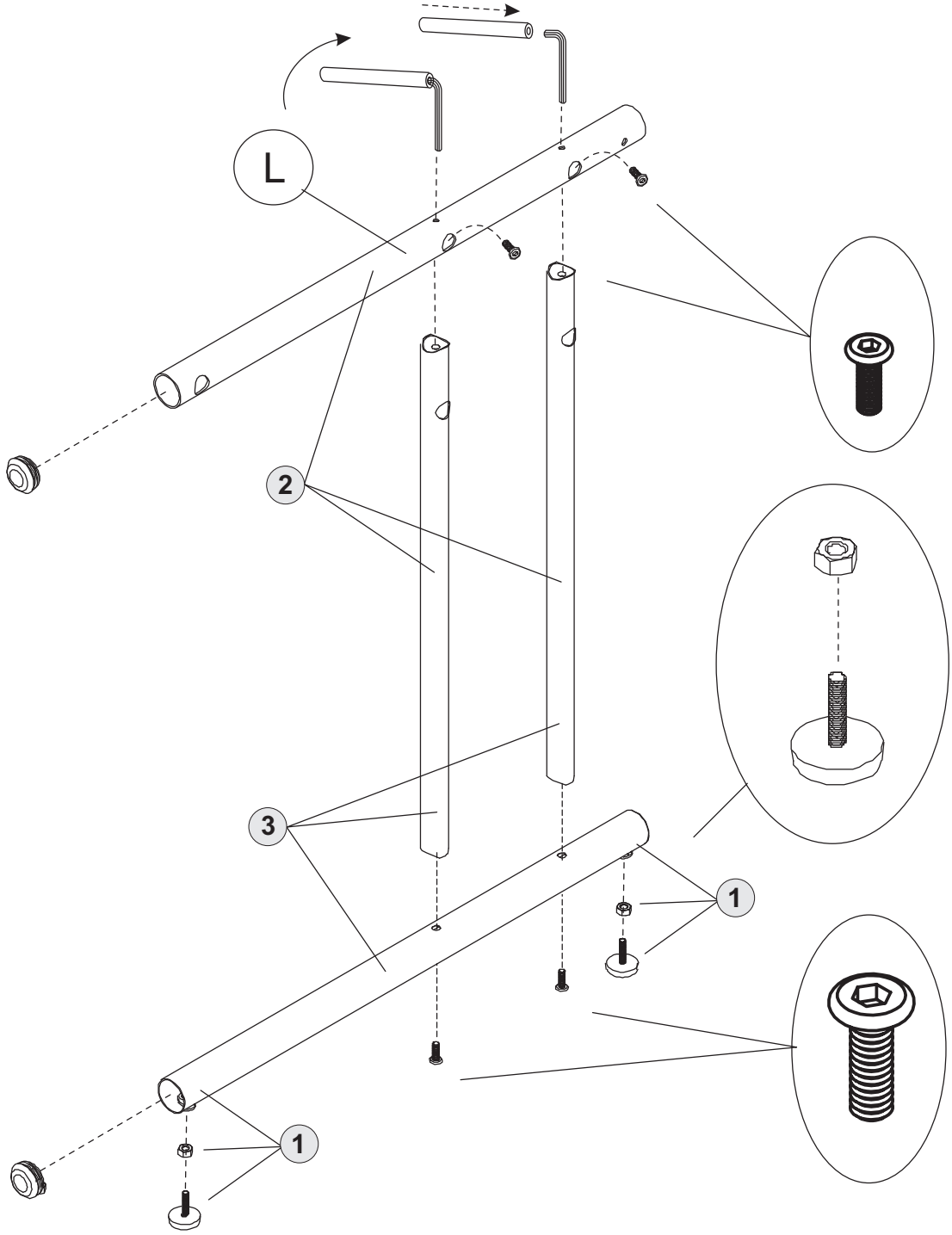

22

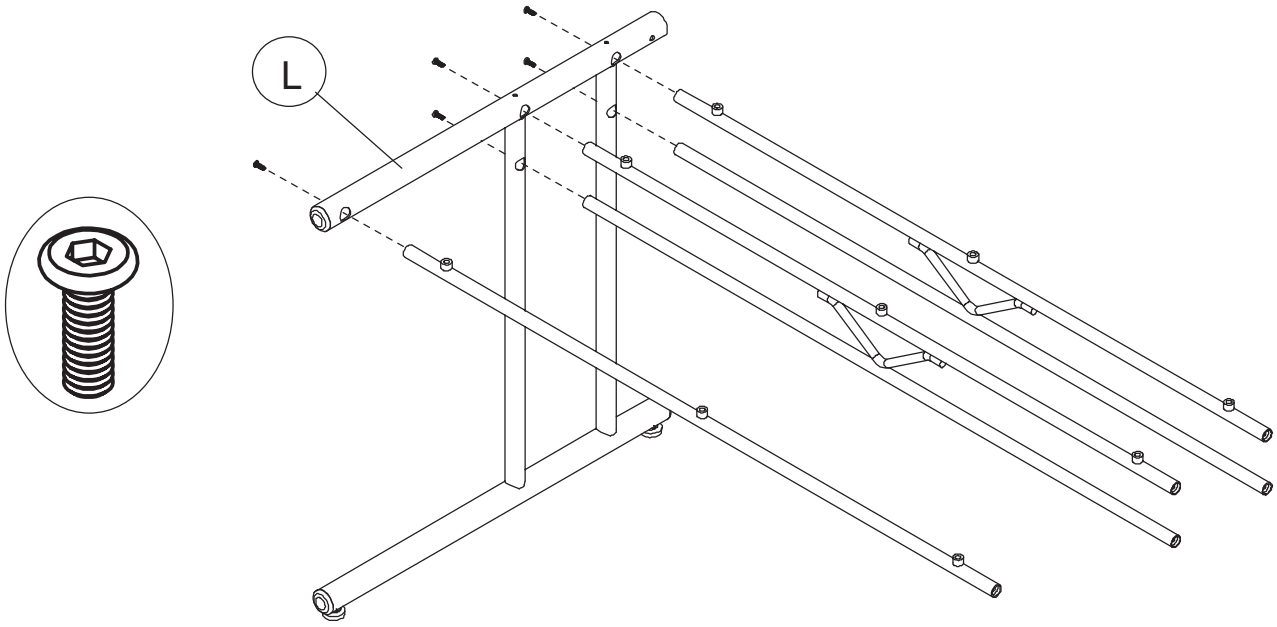

23

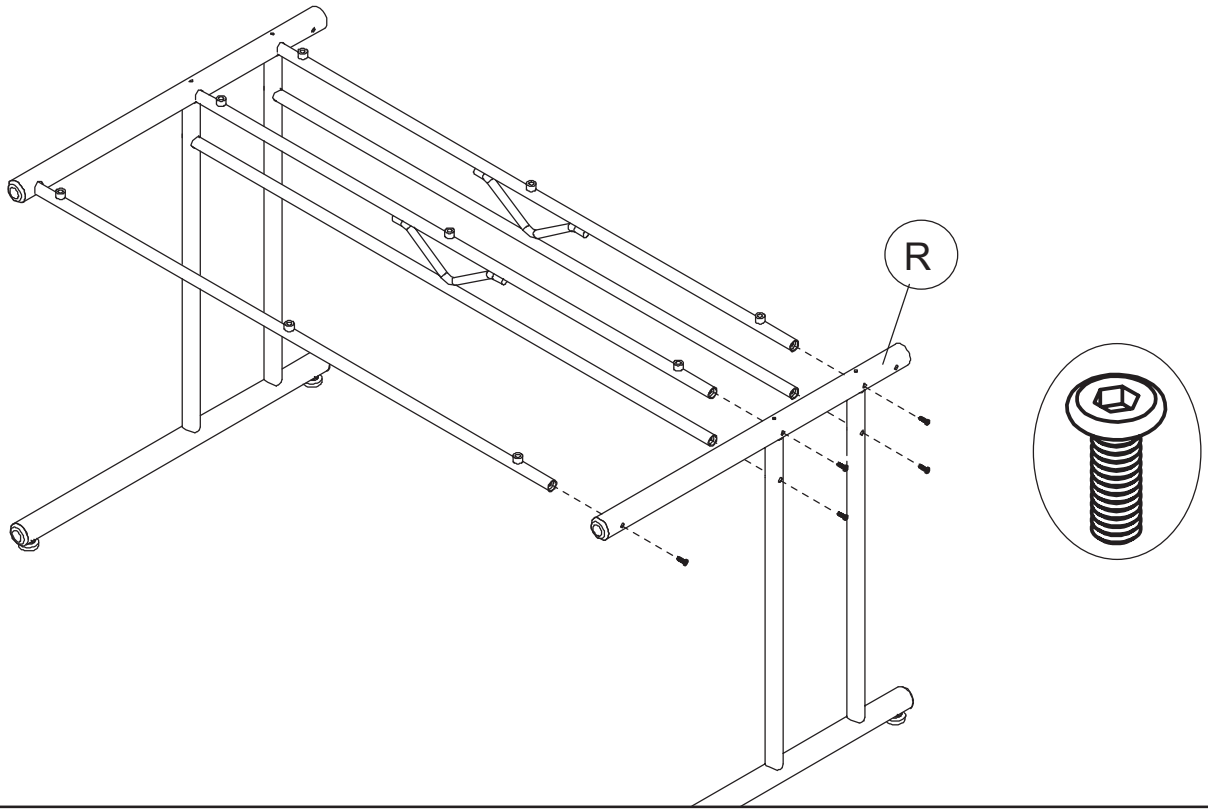

24

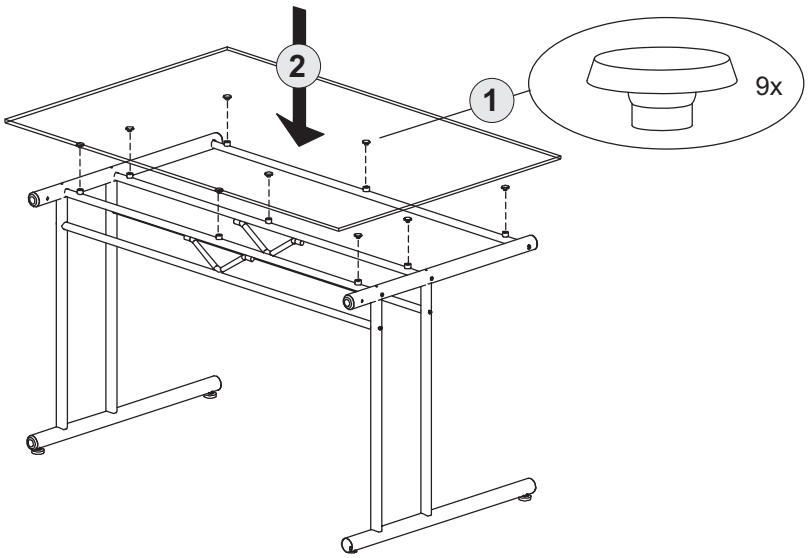

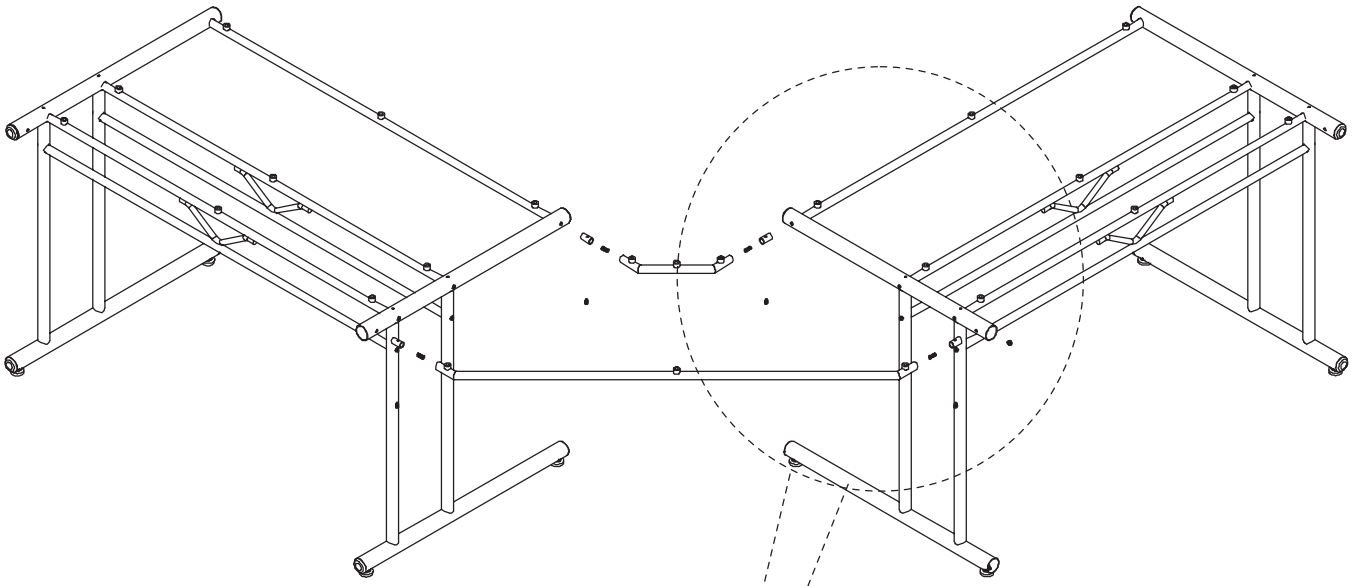

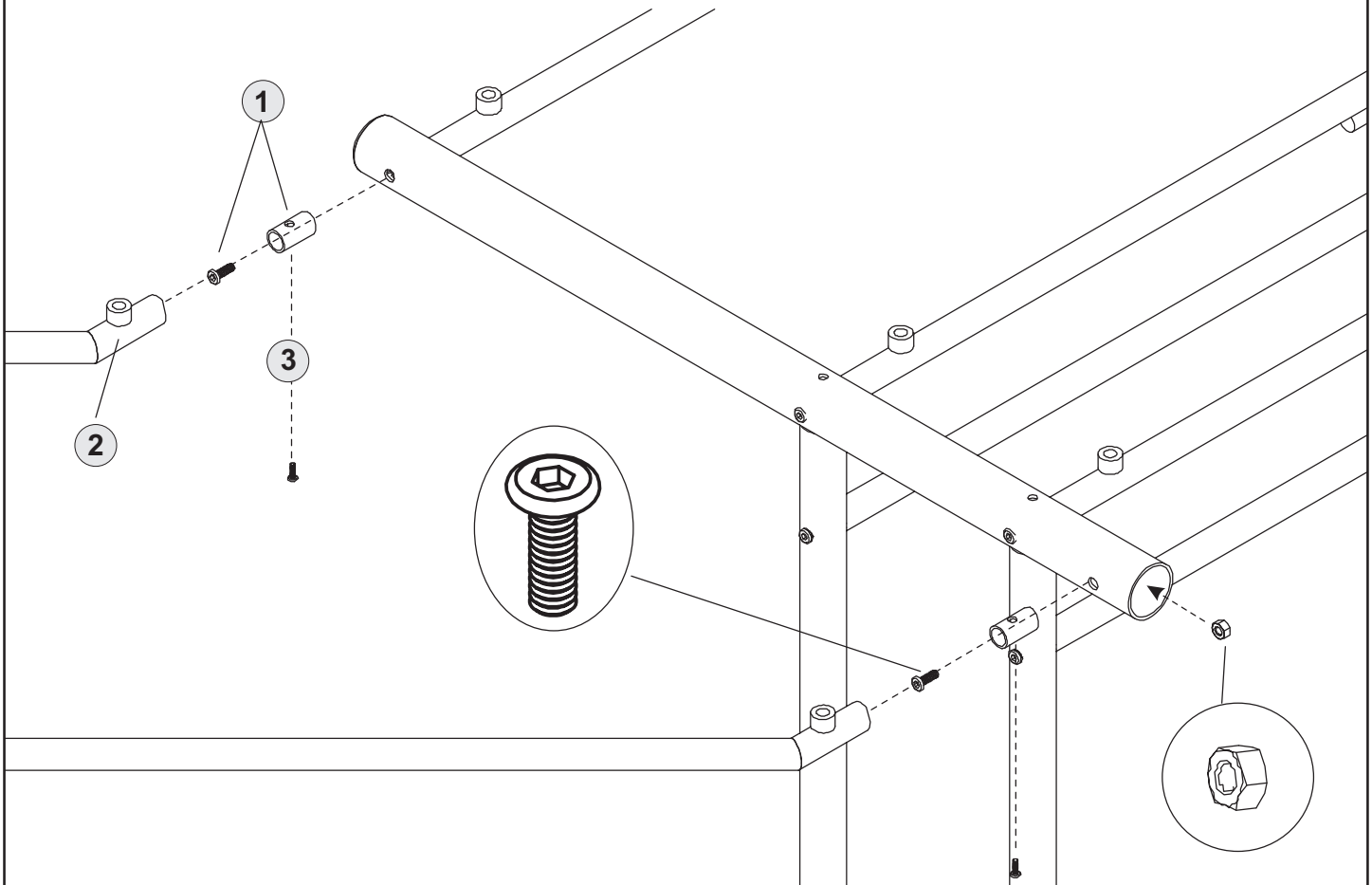
1
2
3